TRANSPONDER BYPASS FOR
HONDA ET ACURA (2 programmable modes)

New Connection

HONDA-DA
(HONDA DATA)

MODE 1:

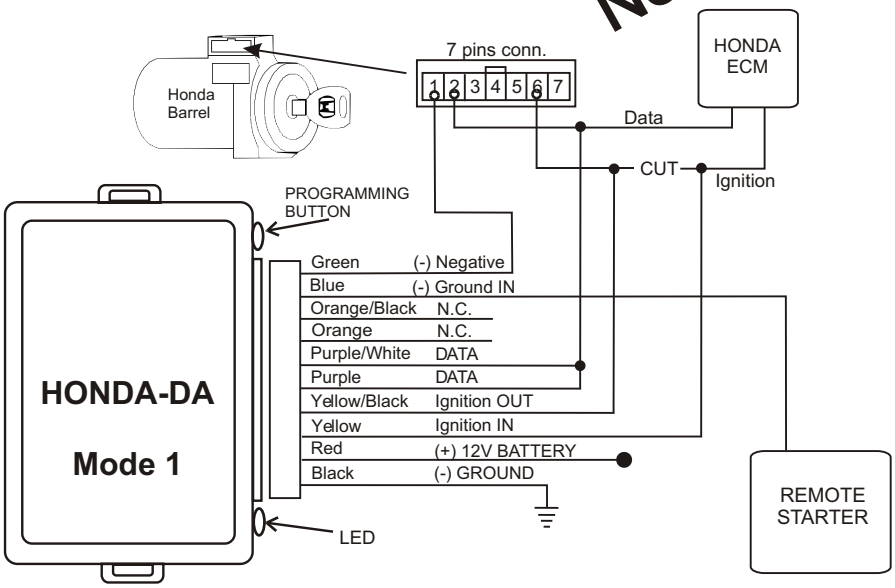

VEHICLE		
MARKS	**MODELS**	**YEARS**
HONDA	CIVIC	2001 - 2005
	CRV	2002 - 2005
	ACCORD	2003 - 2005
	ELEMENT	2003 - 2005
ACURA	1.7EL	2001 - 2005
	RSX	2002 - 2004
	TSX	2004
	TL	2004
	MDX	2003 - 2004

WIRES COLORS						
	conn. Pin #	Civic 1.7EL	CRV Element	Accord TSX	MDX	TL
Brown/Yellow(negative)	1	X	X	X	X	X
Red/Blue (data)	2	X		X		X
Red (data)	2				X	
White (data)	2		X			
Yellow/Black (ignition)	6	X	X			
Black/Yellow (ignition)	6			X		
Green/White (ignition)	6				X	
Black (ignition)	6					X

All 2005 vehicles can have different wire's colors but the connector pins # are the same

MODE 2:

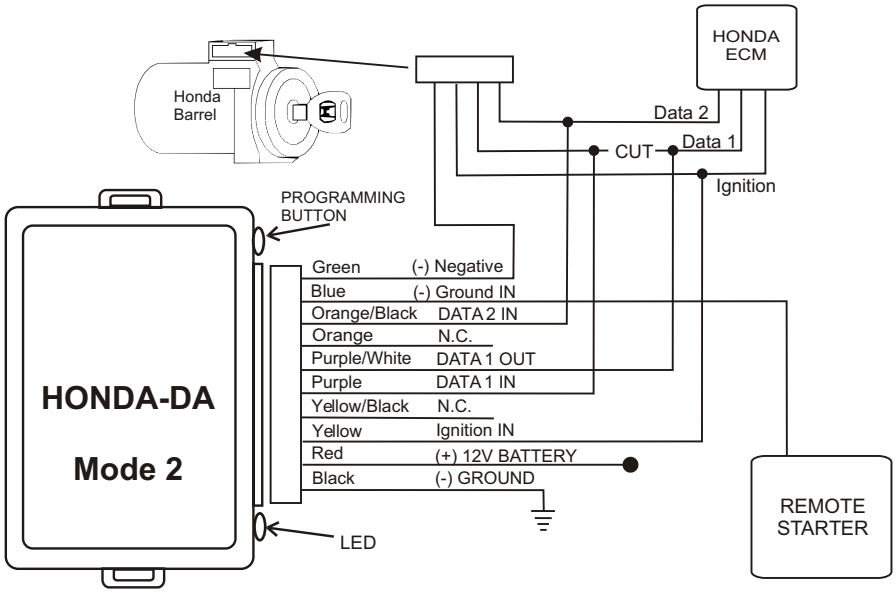

VEHICLE		
MARKS	**MODELS**	**YEARS**
HONDA	ODYSSEY	1999 - 2004
	CRV	1998 - 2001
	ACCORD	1998 - 2002
	PILOT	2003 - 2004
ACURA	1.6EL	1998 - 2000
	INTEGRA	2000 - 2002
	CL	1998 - 2003
	TL	1998 - 2003
	MDX	2001 - 2002

WIRES COLORS					
	Odyssey MDX	PILOT	Accord CL & TL		
Brown/Black (negative)	X		X		
Brown/Yellow (negative)		X			
Blue/Green (Data 1)	X				
Red (Data 1)		X	X		
Orange/Blue (Data 2)	X				
Blue (Data 2)		X	X		
Yellow/Black (ignition)	X	X	X		

****IMPORTANT****

You must use the **Black key** to complete the programming procedure.

Programming :

Keep the programming button pressed down while inserting the wire harness into connector of the HONDA-DA.
Release the programming button once the LED turn ON.
Turn the Ignition to the ON position.
The number of LED flashes indicates the mode. (I.e. Mode 1 = 1 Flash)
Press the programming button to switch between modes 1, 2 and 3. (Mode 3 is future use)
Once the mode is selected, turn the ignition key to OFF position.
Turn the IGNITION key to the ON position once again. The LED will illuminate. The module is now programmed.
Turn the key to the OFF position and remove it, start the vehicle using the remote starter to insure functionality.

Troubleshoot:

With Ignition key ON :
LED flashing rapidly : Module already programmed and not actived by Ground IN.
LED OFF : Module not programmed.
With remote starter ON :
LED steady ON : Module functional in mode 1, with the remote starter Ground IN.
LED OFF: Module functional in mode 2, with the remote starter Ground IN.

TECHNICAL SUPPORT :

TEL : 514-255-0446 FAX: 514-255-1367
Web: http://support.fortinautoradio.com

Note: Neither the manufacturer or distributor of this module is responsable of damages of any kind indirectly or directly caused by this module, except for the replacement of this module in case of manufacturing defects.

VERSION : 1.2
Révision : Jan. 12 2005

MADE IN CANADA